THE ELEMENTS

It's entirely up to you...

One table, one drawer unit, one storage chest...loads of possibility!

The clever modular design gives many different configuration possibilities allowing it to fit perfectly into your home. When assembled each unit can be fixed together (with fixings screws provided) to give a sturdy continuous surface.

See our configuration suggestions for inspiration!

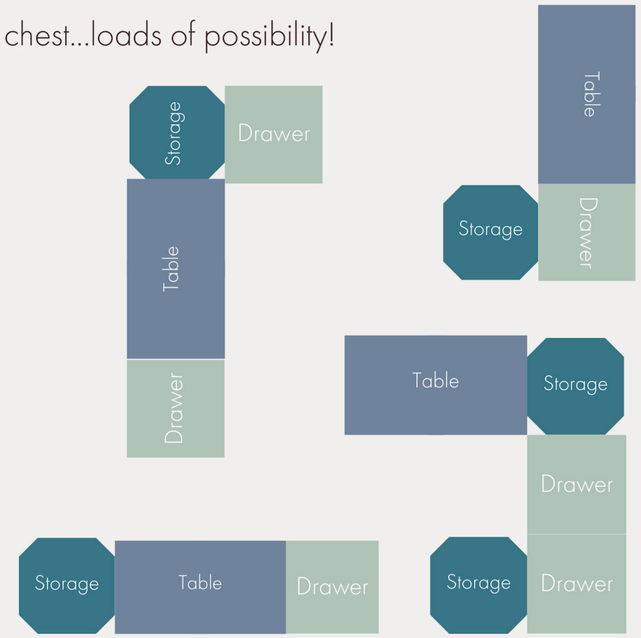

ELEMENTS

Arrives in an easy to assemble form that allows it to be built up, quickly and easily in your home. Ideal for assembly in awkward to get to places such as attics, up narrow stairs, or even just a small room.

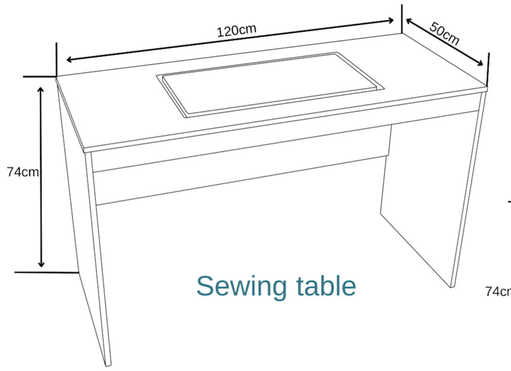

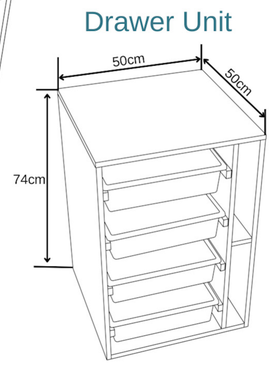

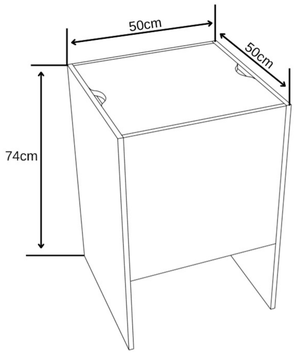

Great value! Start with just the main table unit and add to it as you wish.

A huge amount of storage potential!

The table is fitted with a 2-step manual mechanism platform, allowing either a flatbed or free-arm sewing positions. Each position can be reached by using a quick release adjustment lever.

Flatbed inset (1942 US) is an optional extra

The table is fitted with our maxi opening giving it the ability to fit virtually all of the largest domestic sewing machines.

Need a chair? See pg.38-39 for more information

Available in:

White

Self assembly required

For more information on purchasing the right inset for you please see pg.42 for details.