# SUPER Q

## A truly fabulous unit which will answer all of your sewing needs

The Super Q quilters cabinet includes everything you could need for a practical and convenient workspace - one that inspires creativity. With a single drawer integrated into the main cabinet and a huge separate 3-drawer caddy, it ensures everything has a home, lending itself perfectly to a productive and organised creative space.

With a fully customisable worktop, boasting a huge work area at the back of the machine which can be extended by lifting the leaf up when needed and folded back down when not.

Internal dimensions of the caddy drawers:

Top & middle drawer:
W 56cm
D 38.5cm
H 9cm

Bottom drawer:
W 56cm
D 38.5cm
H 20cm

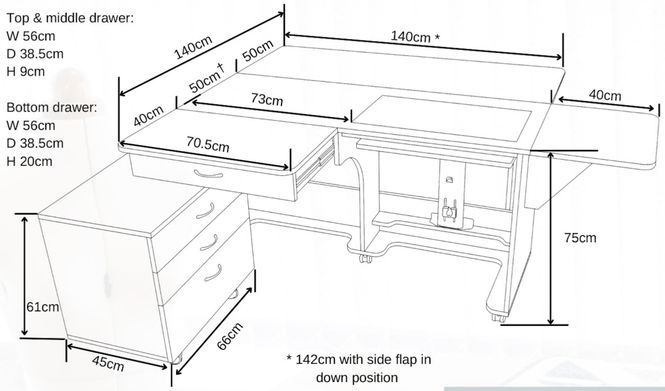


* 142cm with side flap in down position

† 52cm with back flap in down position

**Fully Closed**
W 142cm (56" - with side flap in down position)
D 52cm (20 ½" - including drop leaf flap down)
H 75cm (29 ½")

An acrylic inset plate which sits flush inside the aperture to create a level workspace is included with this model.

The huge drawer caddy can be positioned anywhere to make working easier for you.

Designed with sturdy gate legs this cabinet is ideal for all sewing projects. Additionally, this cabinet comes with various "slot in" filler pieces to create even more work space including above both the integrated drawer and the sewing machine when it's stowed away.

> *"This sewing cabinet is indeed a dream and is just perfect for quilting. I have a Bernina 750 and a Pfaff Creative Performance, both of which fit beautifully into my Super Q."*
>
> HORN CUSTOMER

Available in:

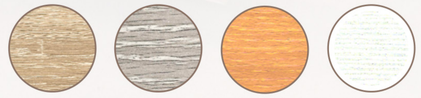

Weathered Oak | American Grey Oak | Beech | White

Need a chair? See pg.38-39 for more information

Delivered assembled

Fitted with our Maxi-lifter opening (type 1942) which is capable of taking virtually all domestic sewing machines on the market old or new!

Please note: due to its size, it may not be possible to take this unit up an internal staircase. See pg. 43 for more details.